PHILIPS

CoreLine SlimDownlight

DN145B

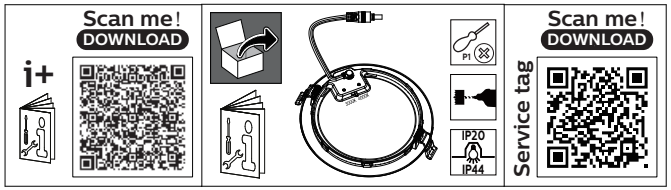

indoor | 220V 240V | 50Hz 60Hz | Max. 40 °C Min. -20 °C

	Driver	Light source of energy efficiency class	Ø mm	kg
DN145B LED6S/830 _ 840 WH	PSU	D	80-83mm	0.18
DN145B LED10S/830 _ 840 WH	PSU/PSD/WIA	D	152-157mm	0.297/0.43/0.393
DN145B LED20S/830 _ 840 WH	PSU/PSD/WIA	D	205-210mm	0.413/0.546/0.508

*Dimensions in mm

DN145B

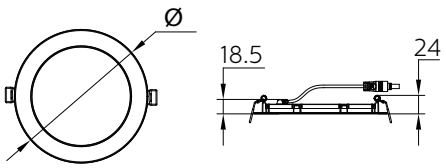

	LED6S	LED10S	LED20S
Ø	90	170	218

Unit:mm

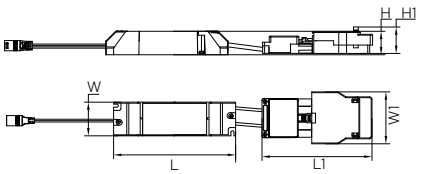

	L	W	H	L1	W1	H1
PSU	122.6	70.5	25	/	/	/
PSD	156	43	30	141	66.5	33.8
WIA	156	43	30	120	45.5	38.8

Unit:mm

Recessed Mounted

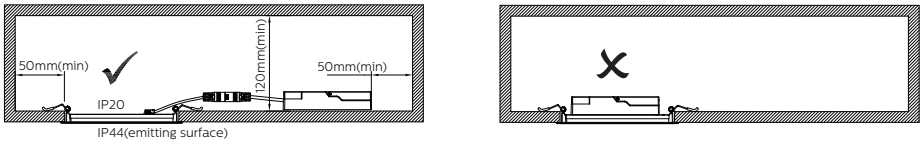

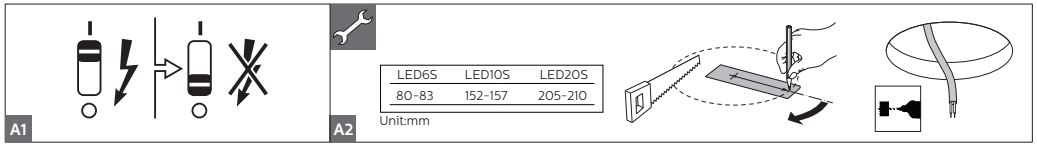

LED6S	LED10S	LED20S
80-83	152-157	205-210

Unit:mm

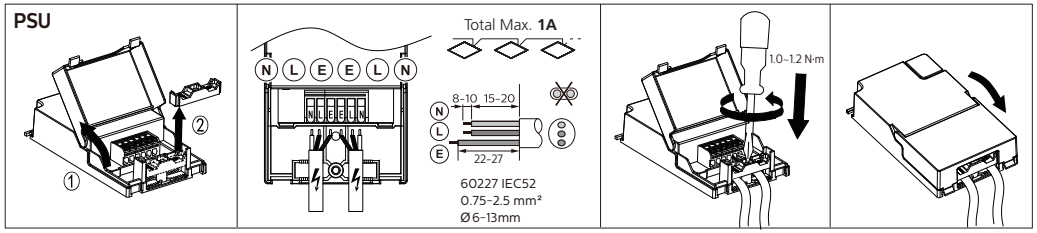

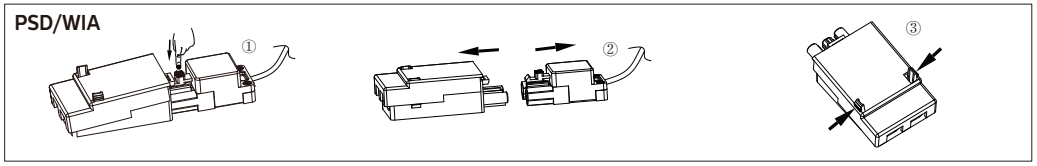

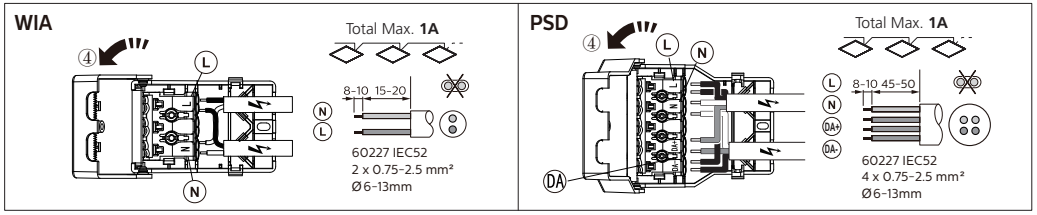

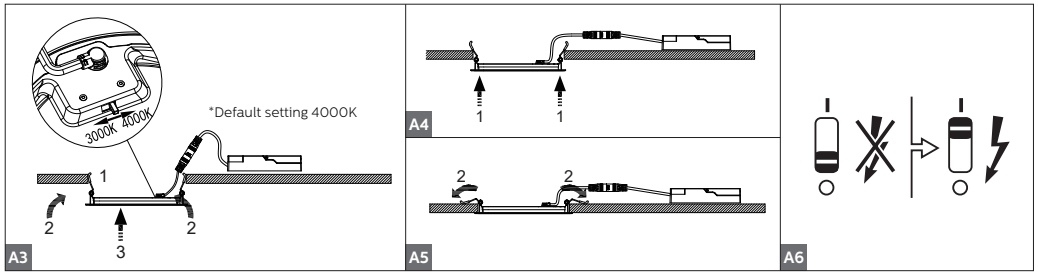

Inrush current

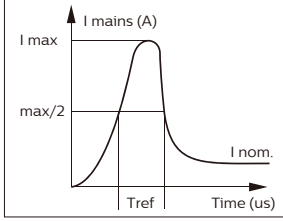

Driver	PSU	PSD	WIA
Electrical characteristics			
Imax(A)	5.7	16.5	4.9
Tref(us)	300	177	56
MCB	Downlights Max.		
B-10A	41	22	15
B-13A	54	29	19
B-16A	67	36	24
C-10A	70	37	25
C-13A	91	48	32
C-16A	113	61	40

ATTENTION
OBSERVE PRECAUTIONS FOR HANDLING
ELECTROSTATIC SENSITIVE DEVICES

- DN145B version is IP20 & as such is not protected against water ingress & as such we strongly recommend that the environment in which the luminaire is to be installed is suitably checked
- If the above advice is not taken and the luminaires are subject to water ingress, Philips / Signify cannot guarantee safe failure & product warranty will become void
- The luminaire shall not be covered with thermal insulation or similar material under any circumstance.
- Luminaire must not be used or stored in corrosive environment where hazardous materials such as Sulphur, Chlorine, phthalates, etc,are present.
- If the external flexible cable or cord of this luminaire is damaged, it shall be exclusively replaced by the manufacturer or his service agent or a similar qualified person in order to avoid a hazard.
- Between LV and control circuit is basic insulation.

© 04/2026, Signify Holding
All rights reserved

Data subject to change without notice
Keep for future reference: www.philips.com/lighting

Installation of Emergency unit

Installation of Emergency Lighting Kit
(Not included, order separately)
This product is only compatible with:
912401483602 EM300V ELB ELP3 kit LV 3.6V 4900mAh LB

1 Labels

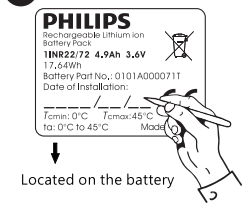

Located on the battery

Maintained Emergency 220-240Vac

X	1	AD	180

Maintained Emergency ATS Type S 220-240Vac

X	1	ADF	180

OR

Non-Maintained Emergency 220-240Vac

X	0	AD	180

Non-Maintained Emergency ATS Type S 220-240Vac

X	0	ADF	180

Stick to/ into the luminaire

Stick the kit to the luminaire

2 Connection

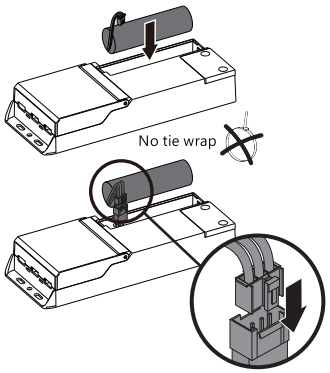

3 Log book

4 Cut-out

Cut-out: Ø20mm

5 Set test mode

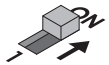

Manual

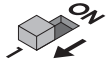

Self-test(Default)

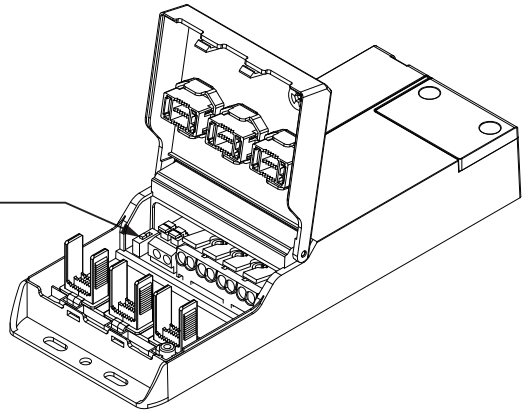

Emergency wiring

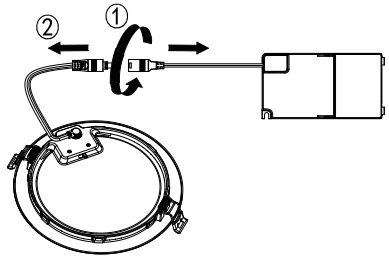

Driver output current ≤ 2A

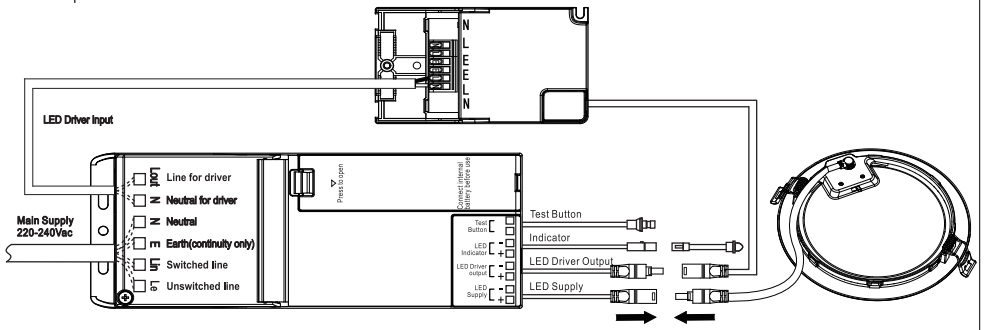

Charge time

Emergency Lumen Output

Rated lumen output in emergency mode:
DN145B LED6S/830_840 WH: min 270lm
DN145B LED10S/830_840 WH: min 280lm
DN145B LED20S/830_840 WH: min 290lm

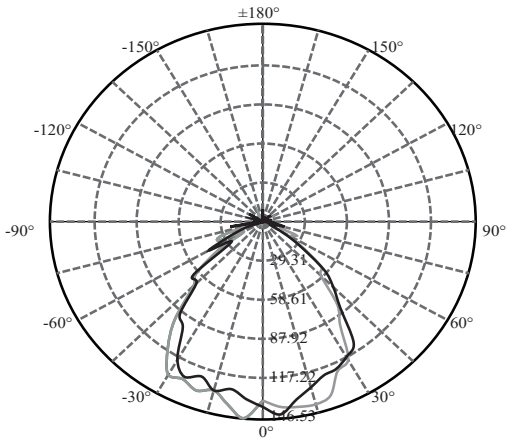

©04/2026 Signify Holding.
All rights reserved. This document contains information relating to the product portfolio of Signify which information may be subject to change. No representation or warranty as to the accuracy or completeness of the information included herein is given and any liability for any action in reliance thereon is disclaimed. The information presented in this document is not intended as any commercial ofer and does not form part of any quotation or contract. Philips and the Philips Shield Emblem are registered trademarks of Koninklijke Philips N.V.. All other trademarks are owned by Signify Holding or their respective owners.

Signify Holding.
The Netherlands